5/25/2017 13:19

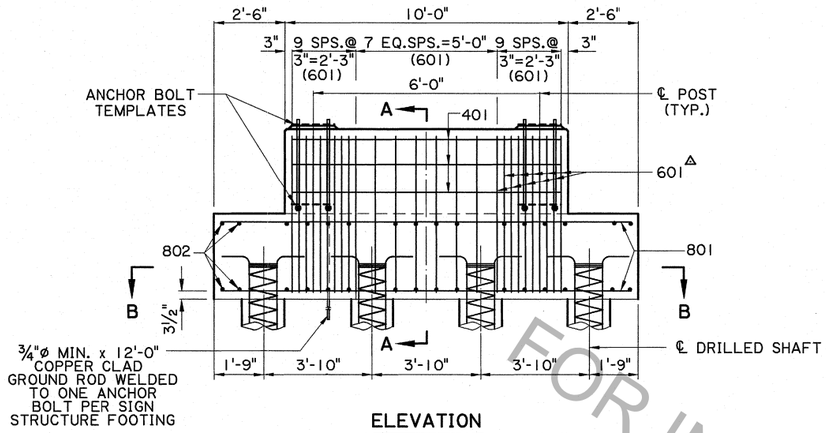

ELEVATION

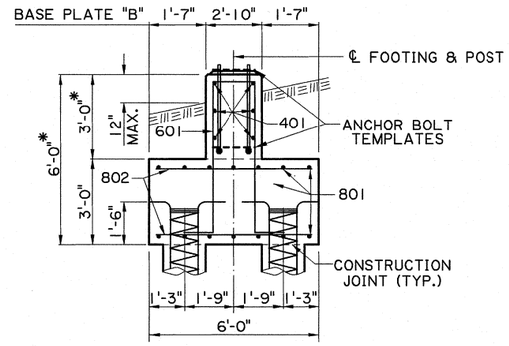

SECTION A-A

ESTIMATED QUANTITIES (DRILLED SHAFT FOOTING "B")					
BAR	NO.	UNIT LENGTH	TOTAL LENGTH	LOCATION	
801	14	14'-6"	203'-0"	FOOTING	
802	32	5'-6"	176'-0"	FOOTING	
TOTAL NO. 8 BARS = 379'-0"				=	1012 LBS.
601	26	15'-4"	398'-8"	STIRRUPS IN FOOTING & PED.	
TOTAL NO. 6 BARS = 398'-8"				=	599 LBS.
401	6	9'-6"	57'-0"	PEDESTAL	
TOTAL NO. 4 BARS = 57'-0"				=	38 LBS.
TOTAL DEFORMED REINFORCING STEEL				=	1649 LBS.
TOTAL CLASS A1 CONCRETE				=	13.15 CU.YDS.
STRUCTURAL EXCAVATION				=	45.0 CU.YDS.
STRUCTURAL STEEL				=	(SEE ANCHOR BOLT DETAILS)
⊖ DRILLED SHAFT				=	240 LIN. FT.

ESTIMATED QUANTITIES (ONE DRILLED SHAFT ; L = 30'-0") ⊖					
	BAR	NO.	UNIT LENGTH	TOTAL LENGTH	LOCATION
⊠	601	8	32'-2"	257'-4"	DRILLED SHAFT
	TOTAL NO. 6 BARS = 257'-4"			=	387 LBS.
⊗	301	1	206'-5"	206'-5"	SPIRAL
	TOTAL NO. 3 BARS = 206'-5"			=	78 LBS.
	TOTAL DEFORMED REINFORCING STEEL			=	465 LBS.
	TOTAL CLASS S CONCRETE			=	1.96 CU.YDS.

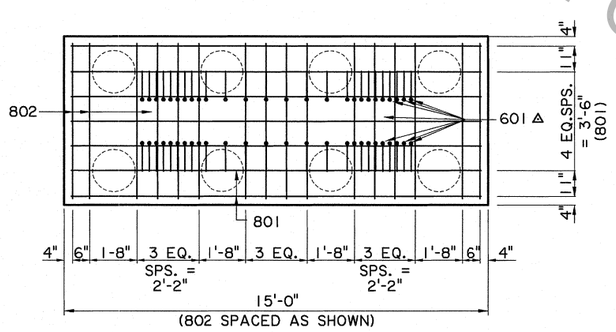

SECTION B-B

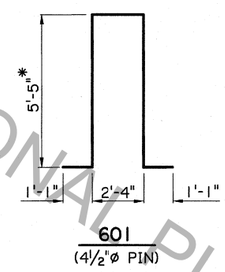

DRILLED SHAFT FOOTING "B"

(OVERHEAD SIGN TRUSS)

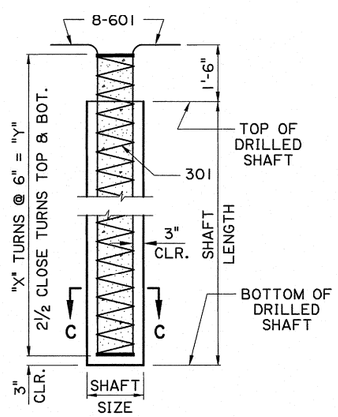

DRILLED SHAFT DETAIL

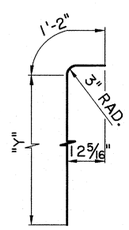

601 ⊠
(4½"ø PIN)

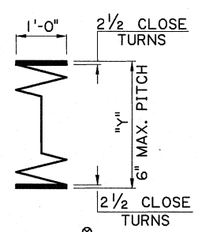

301 ⊗

DRILLED SHAFT DATA TABLE (FOOTING "B")				
WIND ZONE	SHAFT SIZE (IN.)	SHAFT LENGTH (FT.)	X	Y (FT.)
1	N/A			
2	18	30	62	31
3	18	65	132	66

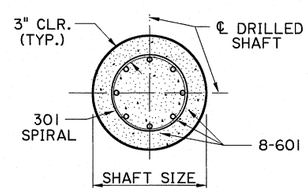

SECTION C-C

STATE OF LOUISIANA
KURT M. BRAUNER
License No. 30567
PROFESSIONAL ENGINEER IN CIVIL ENGINEERING
8/29/11

STATE OF LOUISIANA
CHING-NIEN TSAI
REG. No. 23092
REGISTERED PROFESSIONAL ENGINEER IN CIVIL ENGINEERING
8/29/11

FOR GEOTECHNICAL INFORMATION ONLY

NOTES:

THIS DRILLED SHAFT ALTERNATE IS ALLOWED IN LIEU OF TIMBER PILES AND IS A SUPPLEMENT TO PLAN SHEET NO. 8 OF 16.

FOR ANCHOR BOLT DETAILS, SEE TYPE II TRUSS & CANTILEVER DETAILS AND THE GENERAL NOTES.

ANCHOR BOLTS SHALL BE FURNISHED IN A PREPOSITIONED ANCHOR BOLT ASSEMBLY. (TWO TEMPLATES REQUIRED)

* THESE DIMENSIONS MAY VARY ± ONE FOOT TO ADJUST ELEVATION FOR SITE ADJUST 401 & 601 BARS ACCORDINGLY.

△ NO. 601 BARS MAY BE MOVED TO CLEAR TRUSS ANCHOR BOLTS.

⊖ WIND ZONE 2 ASSUMED FOR SHAFT QUANTITIES. FOR OTHER WIND ZONES, ADJUST QUANTITIES ACCORDINGLY. SEE DRILLED SHAFT DATA TABLES.

⊠ IF A SPLICE IS REQUIRED, THE MINIMUM SPLICE LENGTH SHALL BE 2'-9".

⊗ IF A SPLICE IS REQUIRED, THE MINIMUM SPLICE LENGTH SHALL BE 1½ TURNS.

FOR INFORMATIONAL PURPOSES ONLY

SHEET NUMBER

PARISH | FEDERAL PROJECT | STATE PROJECT

DESIGNED K. BRAUNER | CHECKED C. PORTER | DETAILED I.KOURILOVA | CHECKED K. BRAUNER | DATE K.M.B. | SHEET JAN. 2011 14 OF 16

NO.	DATE	REVISION DESCRIPTION	BY
D	02-13-17	UPDATED FOR 2016 SPECIFICATIONS	

STATE OF LOUISIANA DEPARTMENT OF TRANSPORTATION AND DEVELOPMENT

DRILLED SHAFT FOOTING ALT.

BD.2.7.1.0.14 - OVERHEAD TRAFFIC SIGNS

BRIDGE AND STRUCTURAL DESIGN

IP_PWP:d0695341\BD.2.7.1.0.14 - Overhead Traffic Signs 14.dgn